ENGINE CONTROL (22R–E)

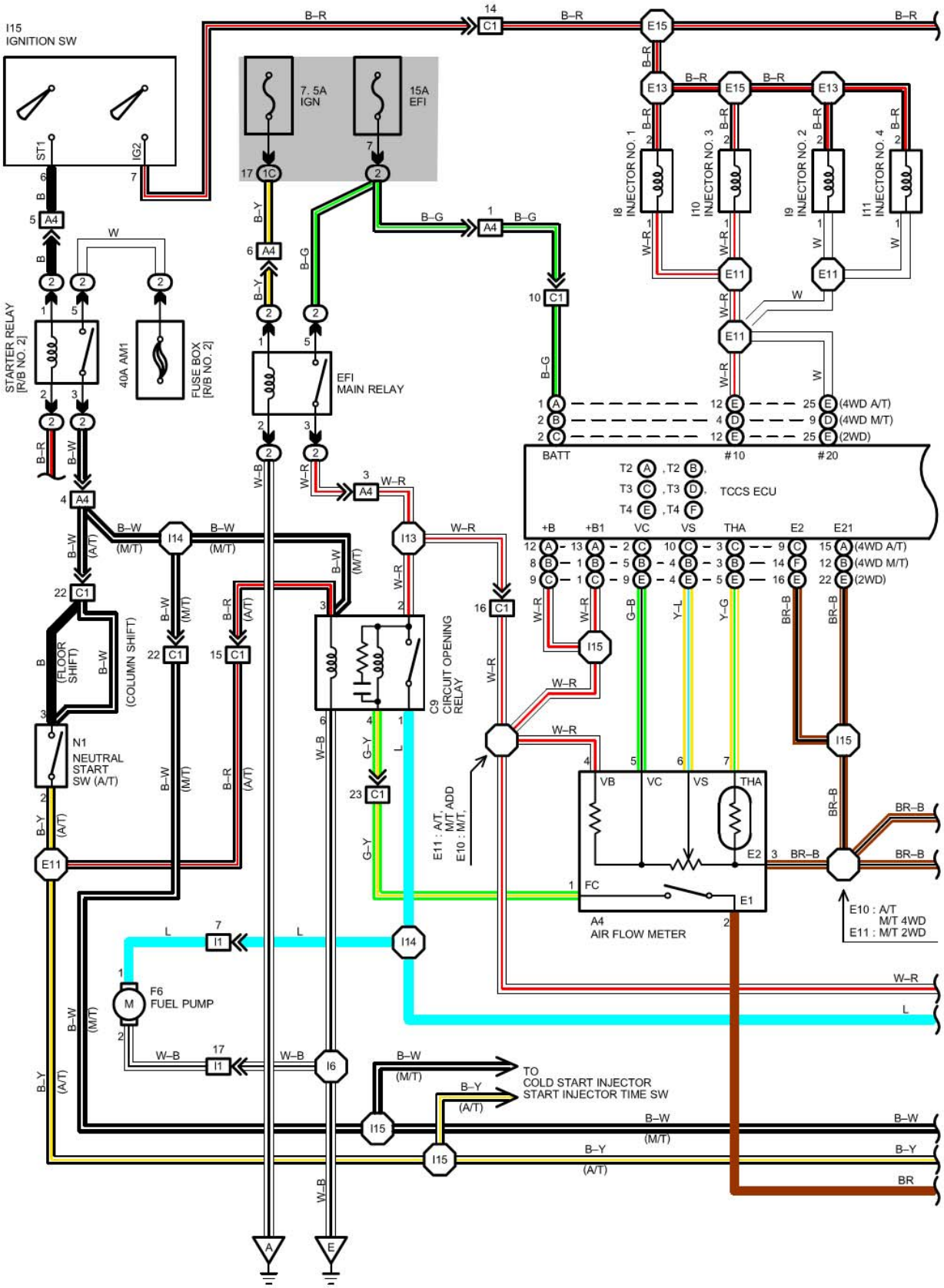

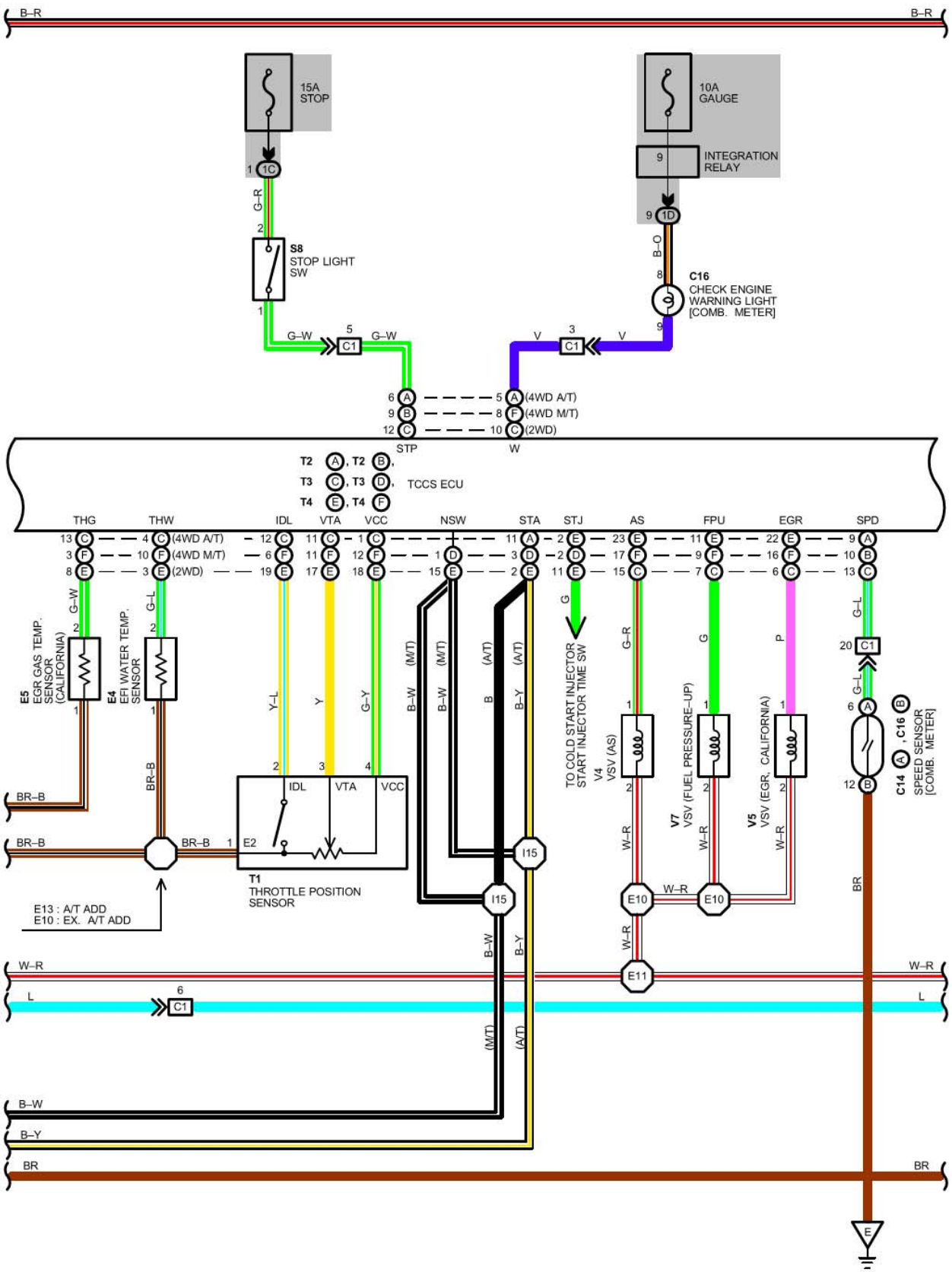
B–R
15A
STOP
10A
GAUGE
INTEGRATION
RELAY
S8
STOP LIGHT
SW
C16
CHECK ENGINE
WARNING LIGHT
[COMB. METER]
G–W
V
(4WD A/T)
(4WD M/T)
(2WD)
STP
W
T2
T3
T4
TCCS ECU
THG
THW
IDL
VTA
VCC
NSW
STA
STJ
AS
FPU
EGR
SPD
E5
EGR GAS TEMP.
SENSOR
(CALIFORNIA)
E4
EFI WATER TEMP.
SENSOR
TO COLD START INJECTOR
START INJECTOR TIME SW
V4
VSV (AS)
V7
VSV (FUEL PRESSURE–UP)
V5
VSV (EGR, CALIFORNIA)
C14 , C16
SPEED SENSOR
[COMB. METER]
BR–B
BR–B
BR–B
E2
T1
THROTTLE POSITION
SENSOR
E13 : A/T ADD
E10 : EX. A/T ADD
I15
E10
E11
W–R
L
B–W
B–Y
BR
(M/T)
(A/T)

ENGINE CONTROL (22R–E)

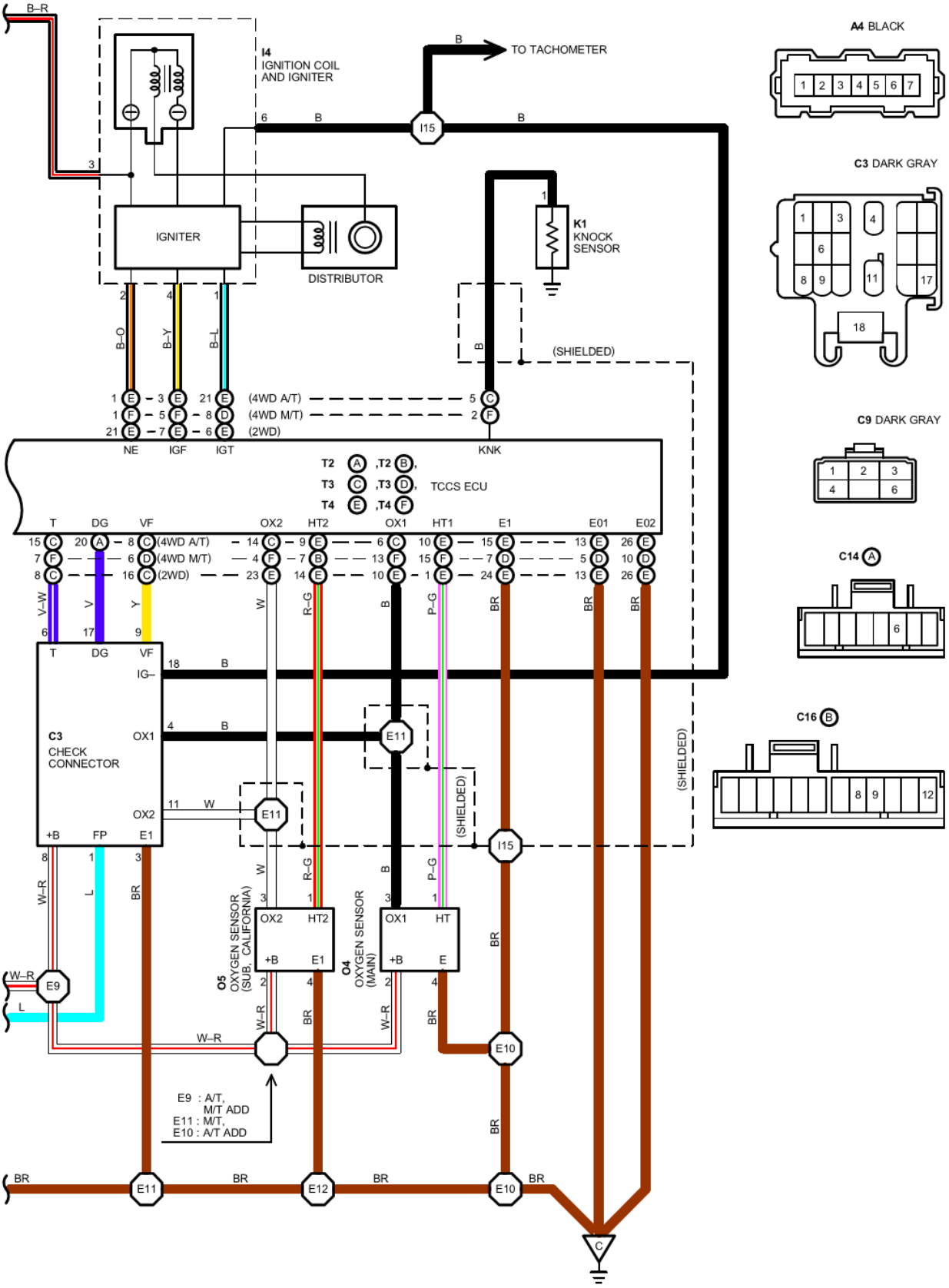

E4 GREEN

E5 DARK GRAY

F6 DARK GRAY

I4 GRAY

(W/O AD)

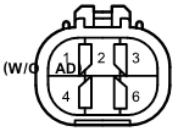

I8, I9, I10, I11 GREEN

I15 BLACK

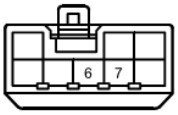

K1 DARK GRAY

N3 GRAY

O4, O5 DARK GRAY

(W/ CRUISE CONTROL) **S8**

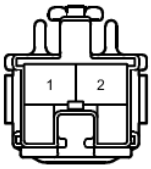

(W/O CRUISE CONTROL) **S8** BLACK

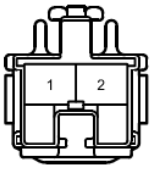

T1 BLACK

(4WD A/T) **T2** (A) DARK GRAY

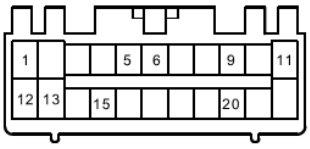

(4WD M/T) **T2** (B) DARK GRAY

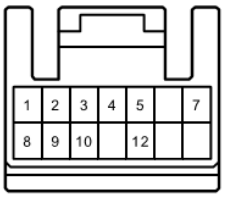

(4WD A/T) **T3** (C) DARK GRAY

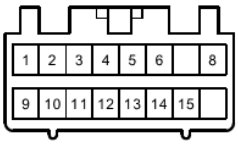

(2WD) **T3** (C) DRAK GRAY

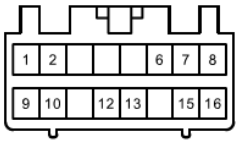

(4WD M/T) **T3** (D) DARK GRAY

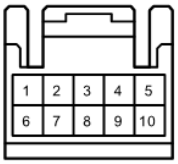

(4WD A/T) **T4** (E) DRAK GRAY

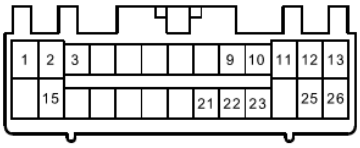

(2WD) **T4** (E) DARK GRAY

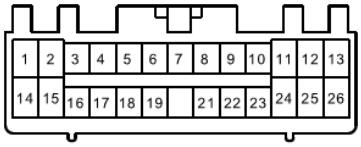

(4WD M/T) **T4** (F) DARK GRAY

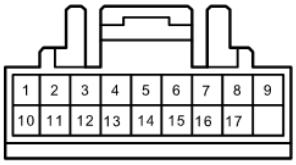

V4, V5 BROWN

V7 BLUE

* FUEL PRESSURE–UP SYSTEM

  THE FUEL PRESSURE UP SYSTEM CAUSES THE VSV (FOR FUEL PRESSURE UP) TO COME ON FOR HIGH TEMP. STARTS AND FOR ABOUT 120 SECONDS AFTER STARTING IN ORDER TO INCREASE THE FUEL PRESSURE, IMPROVE STARTABILITY AT HIGH TEMPERATURES AND PROVIDE STABLE IDLING. THE ECU EVALUATES THE INPUT SIGNALS FROM EACH SENSOR (1, 2, 4 AND 12), OUTPUTS CURRENT TO TERMINAL FPU AND CONTROLS THE VSV.

* OXYGEN SENSOR HEATER CONTROL SYSTEM

  THE OXYGEN SENSOR HEATER CONTROL SYSTEM TURNS THE HEATER TO ON WHEN THE INTAKE AIR VOLUME IS LOW (TEMP. OF EXHAUST EMISSIONS LOW), AND WARMS UP THE OXYGEN SENSOR TO IMPROVE DETECTION PERFORMANCE OF THE SENSOR. THE ECU EVALUATES THE SIGNALS FROM EACH SENSOR (INPUT SIGNALS (1, 6, 9, 10, 12)), CURRENT IS OUTPUT TO TERMINAL HT AND CONTROLS THE HEATER.

* AS CONTROL SYSTEM

  THE AS CONTROL SYSTEM TURNS ON THE VSV (FOR AS) WHEN THE ENGINE IS COLD AND DURING DECELERATION, PREVENTING OVERHEATING OF THE TWC (THREE–WAY CATALYTIC CONVERTER) AND REDUCING HC AND CO EMISSIONS. THE ECU EVALUATES THE SIGNALS FROM EACH SENSOR (INPUT SIGNALS (1, 4, 5, 10)), THEN SENDS OUTPUT TO TERMINAL AS AND CONTROLS THE VSV.

* EGR CUT CONTROL SYSTEM (FOR CALIFORNIA)

  THE EGR CUT CONTROL SYSTEM CONTROLS THE VSV (FOR EGR) BY EVALUATING THE SIGNALS FROM EACH SENSOR INPUT TO THE ECU (INPUT SIGNALS (1, 9)) AND BY SENDING OUTPUT TO TERMINAL EGR OF THE ECU.

3. DIAGNOSIS SYSTEM

WITH THE DIAGNOSIS SYSTEM, WHEN THERE IS A MALFUNCTION IN THE ECU SIGNAL SYSTEM, THE MALFUNCTIONING SYSTEM IS RECORDED IN THE MEMORY. THE MALFUNCTIONING SYSTEM CAN THEN BE FOUND BY READING THE DISPLAY (CODE) OF THE CHECK ENGINE WARNING LIGHT.

4. FAIL–SAFE SYSTEM

WHEN A MALFUNCTION OCCURS IN ANY SYSTEM, IF THERE IS A POSSIBILITY OF ENGINE TROUBLE BEING CAUSED BY CONTINUED CONTROL BASED ON THE SIGNALS FROM THAT SYSTEM, THE FAIL–SAFE SYSTEM EITHER CONTROLS THE SYSTEM BY USING DATA (STANDARD VALUES) RECORDED IN THE ECU MEMORY OR ELSE STOPS THE ENGINE.

GROUND POINT

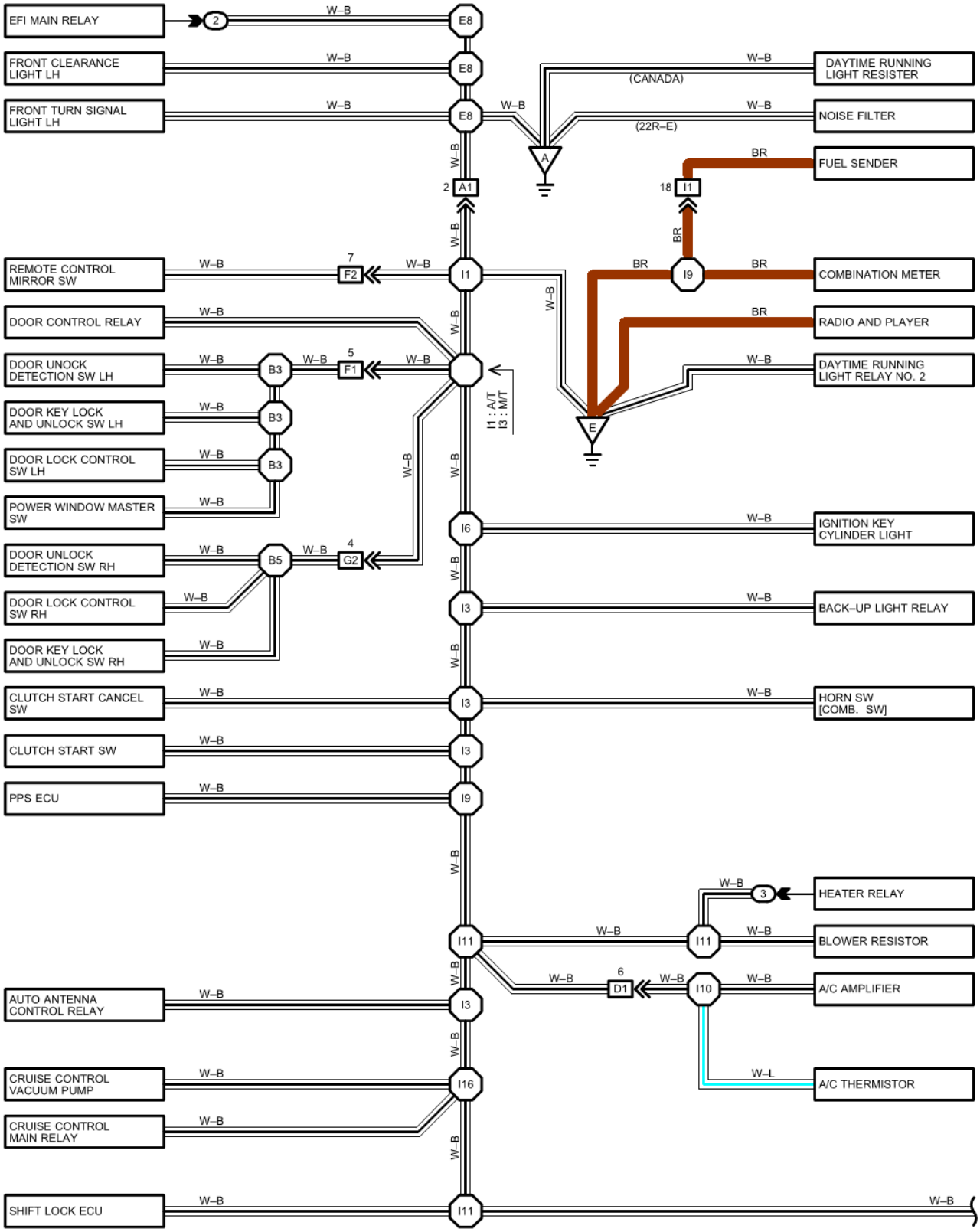

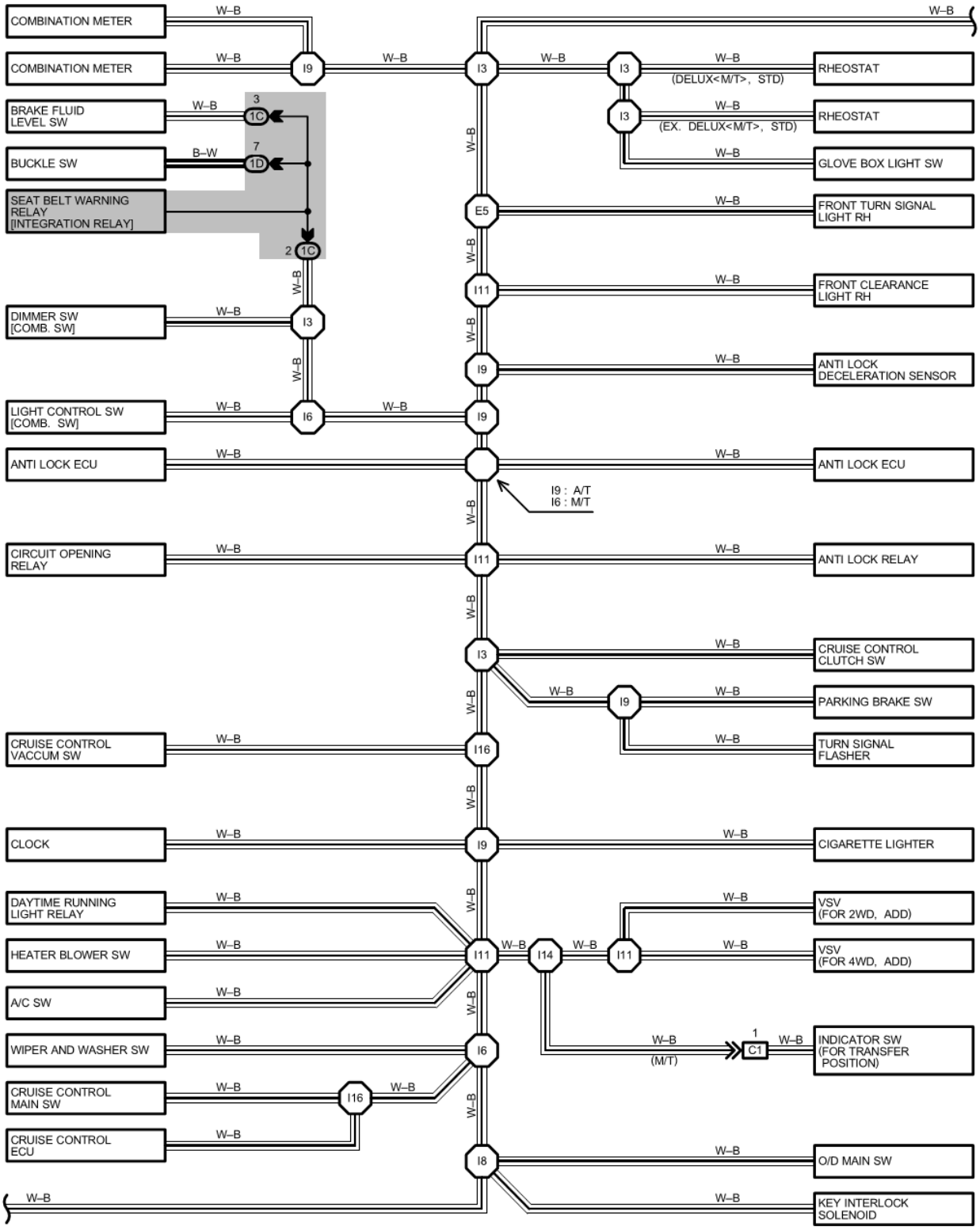
COMBINATION METER
COMBINATION METER
BRAKE FLUID LEVEL SW
BUCKLE SW
SEAT BELT WARNING RELAY [INTEGRATION RELAY]
DIMMER SW [COMB. SW]
LIGHT CONTROL SW [COMB. SW]
ANTI LOCK ECU
CIRCUIT OPENING RELAY
CRUISE CONTROL VACCUM SW
CLOCK
DAYTIME RUNNING LIGHT RELAY
HEATER BLOWER SW
A/C SW
WIPER AND WASHER SW
CRUISE CONTROL MAIN SW
CRUISE CONTROL ECU
RHEOSTAT
(DELUX<M/T>, STD)
RHEOSTAT
(EX. DELUX<M/T>, STD)
GLOVE BOX LIGHT SW
FRONT TURN SIGNAL LIGHT RH
FRONT CLEARANCE LIGHT RH
ANTI LOCK DECELERATION SENSOR
ANTI LOCK ECU
I9 : A/T
I6 : M/T
ANTI LOCK RELAY
CRUISE CONTROL CLUTCH SW
PARKING BRAKE SW
TURN SIGNAL FLASHER
CIGARETTE LIGHTER
VSV (FOR 2WD, ADD)
VSV (FOR 4WD, ADD)
(M/T)
INDICATOR SW (FOR TRANSFER POSITION)
O/D MAIN SW
KEY INTERLOCK SOLENOID
W–B
B–W

GROUND POINT

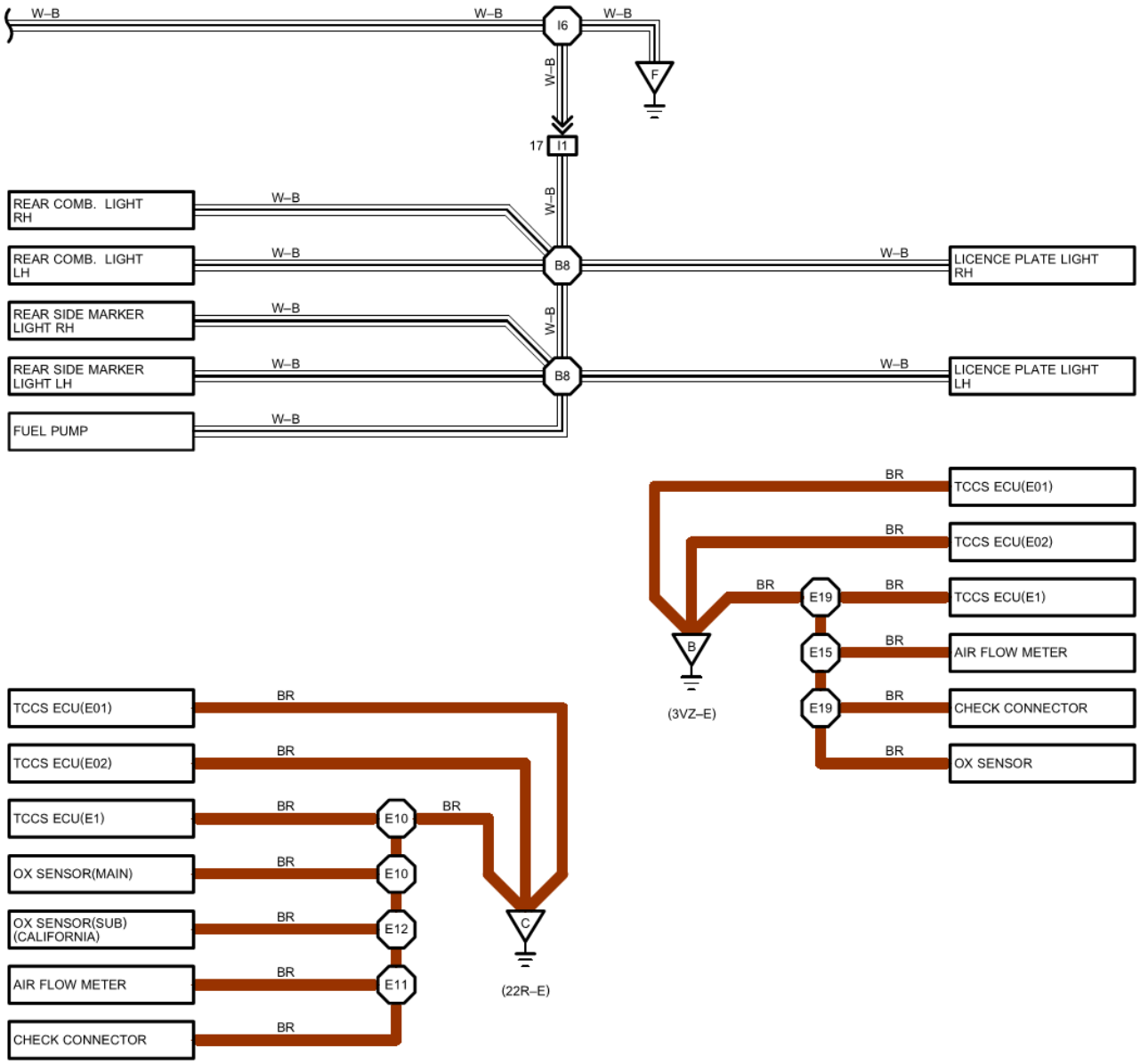

: RELAY BLOCKS

CODE	SEE PAGE	
2	17	R/B NO. 2 (ENGINE COMPARTMENT RIGHT)
3	20	R/B NO. 3 (GLOVE BOX RIGHT)

: JUNCTION BLOCK AND WIRE HARNESS CONNECTOR

CODE	SEE PAGE	JUNCTION BLOCK AND WIRE HARNESS (CONNECTOR LOCATION)
1 C	18	COWL WIRE AND J/B NO.1 (LEFT KICK PANEL)
1 D		

: CONNECTOR JOINING WIRE HARNESS AND WIRE HARNESS

CODE	SEE PAGE	JOINING WIRE HARNESS AND WIRE HARNESS (CONNECTOR LOCATION)
A 1	30	ENGINE ROOM MAIN WIRE AND COWL WIRE (LEFT KICK PANEL)
C 1	30	ENGINE WIRE AND COWL WIRE (RIGHT KICK PANEL)
D 1	30	COWL WIRE AND A/C WIRE (BEHIND GLOVE BOX)
F 1	30	DOOR LEFT WIRE AND COWL WIRE (LEFT KICK PANEL)
F 2		
G 2	30	DOOR RIGHT WIRE AND COWL WIRE (RIGHT KICK PANEL)
I 1	32	FRAME WIRE AND COWL WIRE (UNDER PASSENGER'S SEAT)

: GROUND POINTS

CODE	SEE PAGE	GROUND POINTS LOCATION
A	26 (3VZ–E)	LEFT FENDER
	28 (22R–E)	
B	26	CAMSHAFT BEARING CAP
C	28	INTAKE MANIFOLD
E	30	LEFT KICK PANEL
F	30	RIGHT KICK PANEL

: SPLICE POINTS

CODE	SEE PAGE	WIRE HARNESS WITH SPLICE POINTS	CODE	SEE PAGE	WIRE HARNESS WITH SPLICE POINTS
E 5	26 (3VZ–E)	COWL WIRE	I 6	30	COWL WIRE
	28 (22R–E)		I 8		
E 8	26 (3VZ–E)	ENGINE ROOM MAIN WIRE	I 9		
	28 (22R–E)		I10		
E10	28 (22R–E)	ENGINE WIRE	I11		
E11			I14		
E12			I16		
E15	26 (3VZ–E)		B 3	32	DOOR LEFT WIRE
E19	26 (3VZ–E)		B 5	32	DOOR RIGHT WIRE
I 1	30	COWL WIRE	B 8	32	FRAME WIRE
I 3					

ELECTRICAL WIRING ROUTING

▭ : Location of Connector Joining Wire Harness and Wire Harness

▽ : Location of Ground Points

[22R–E]

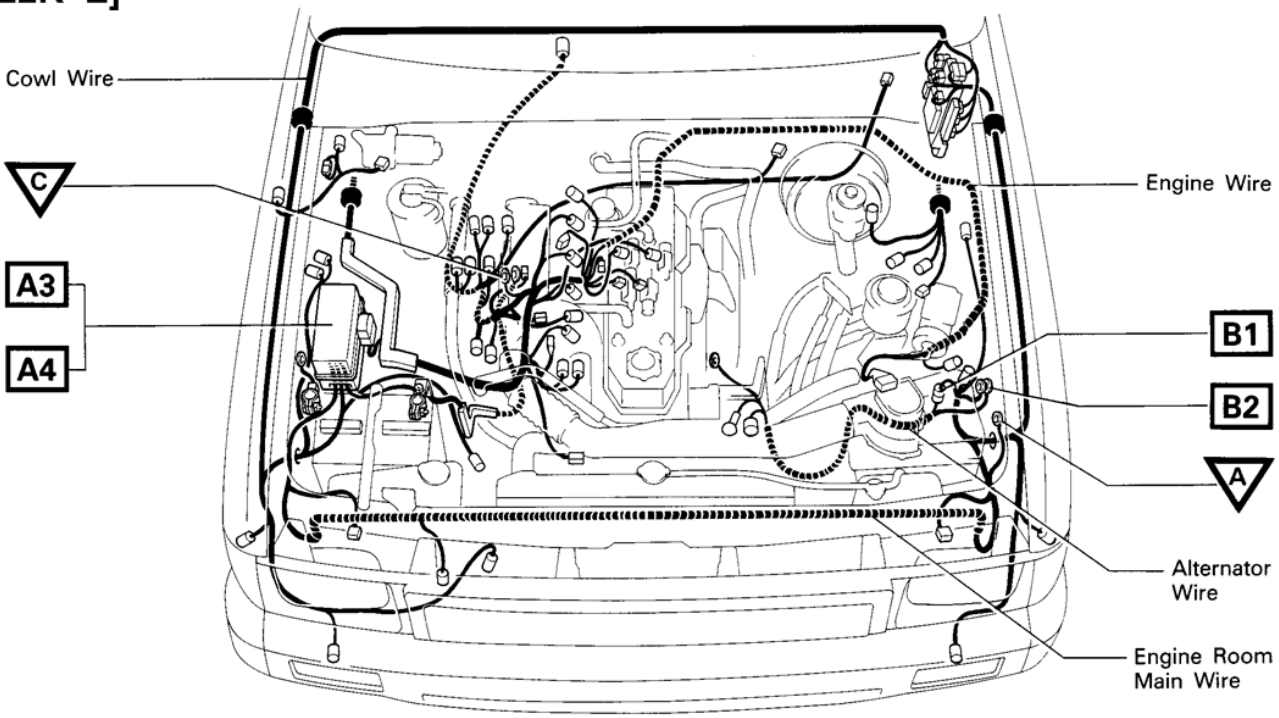

○ : Location of Splice Points

[22R–E]

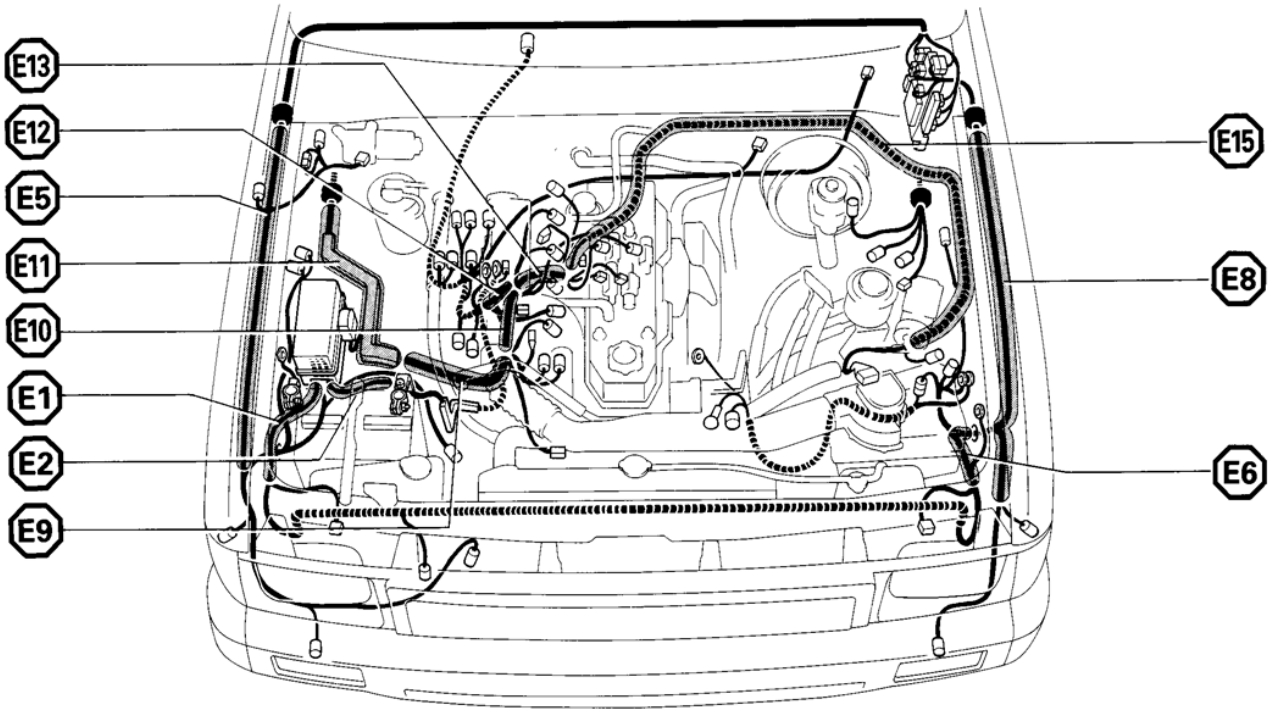

Connector Joining Wire Harness and Wire Harness

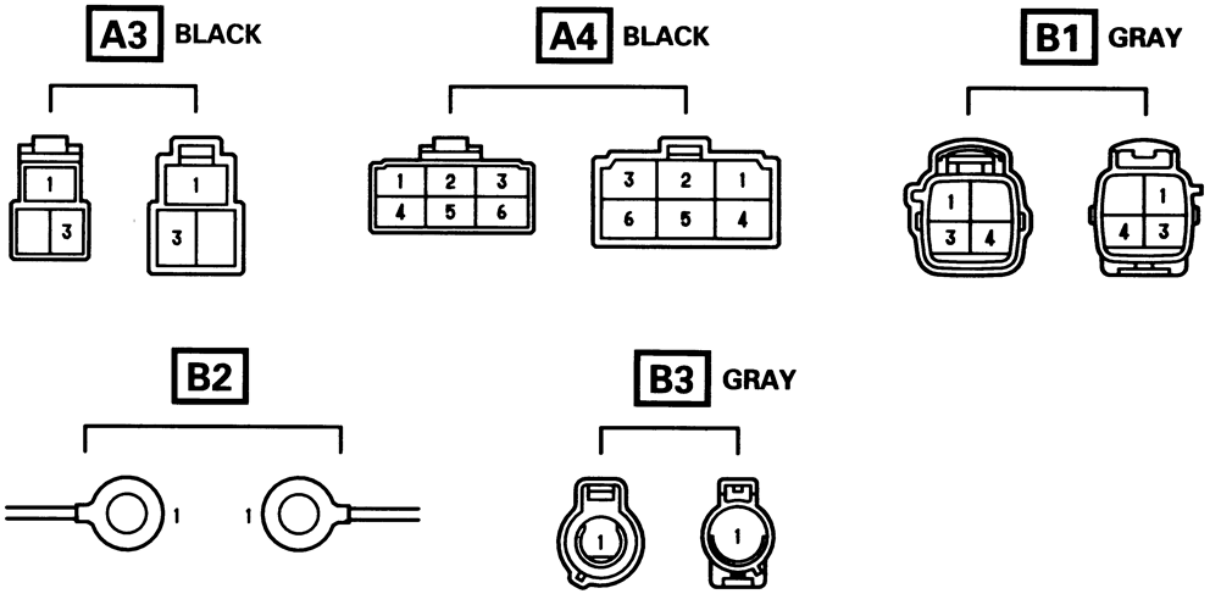

ELECTRICAL WIRING ROUTING

▭ : Location of Connector Joining Wire Harness and Wire Harness

▽ : Location of Ground Points

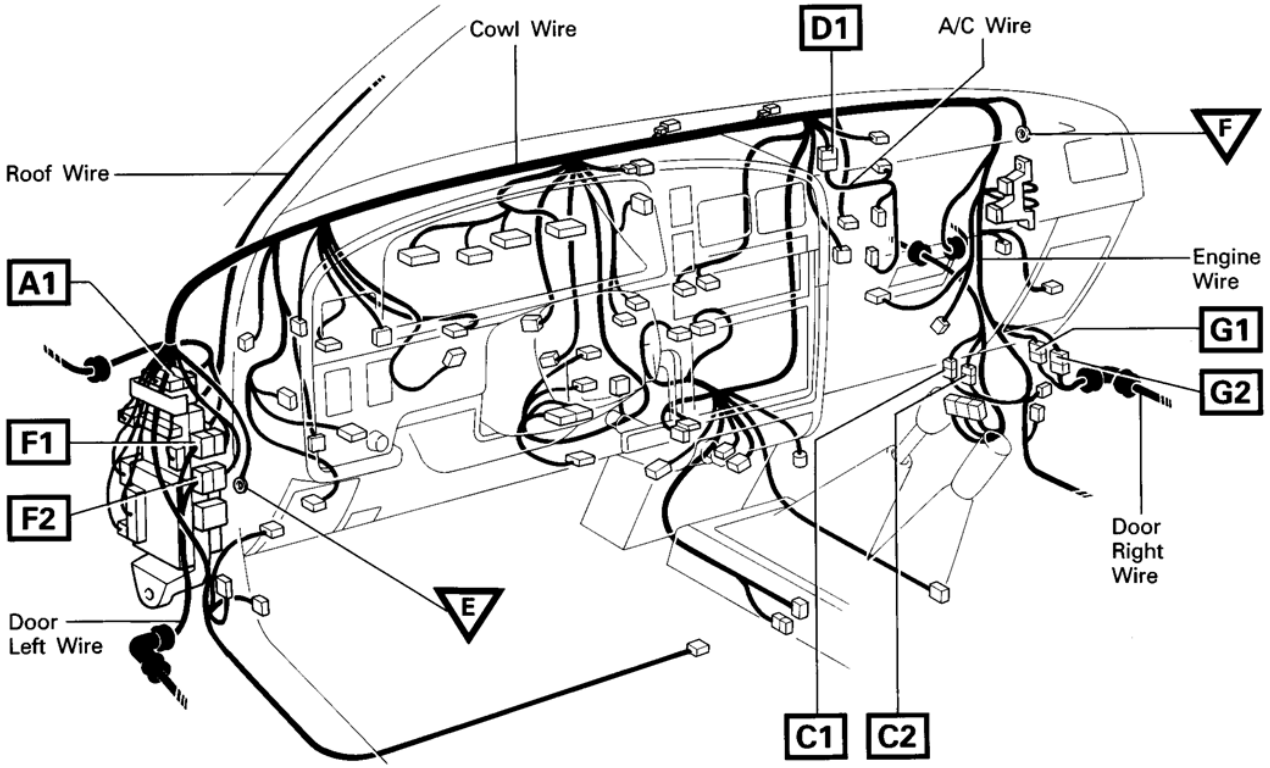

○ : Location of Splice Points

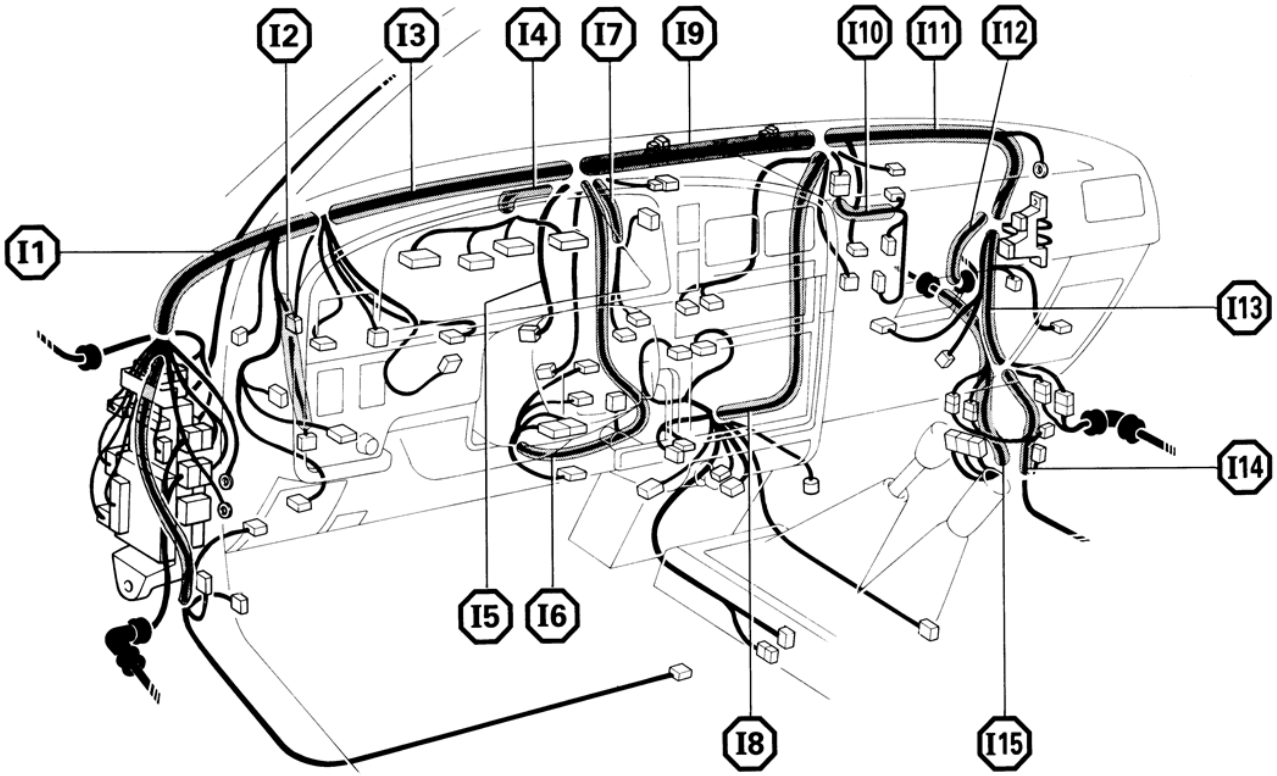

Connector Joining Wire Harness and Wire Harness

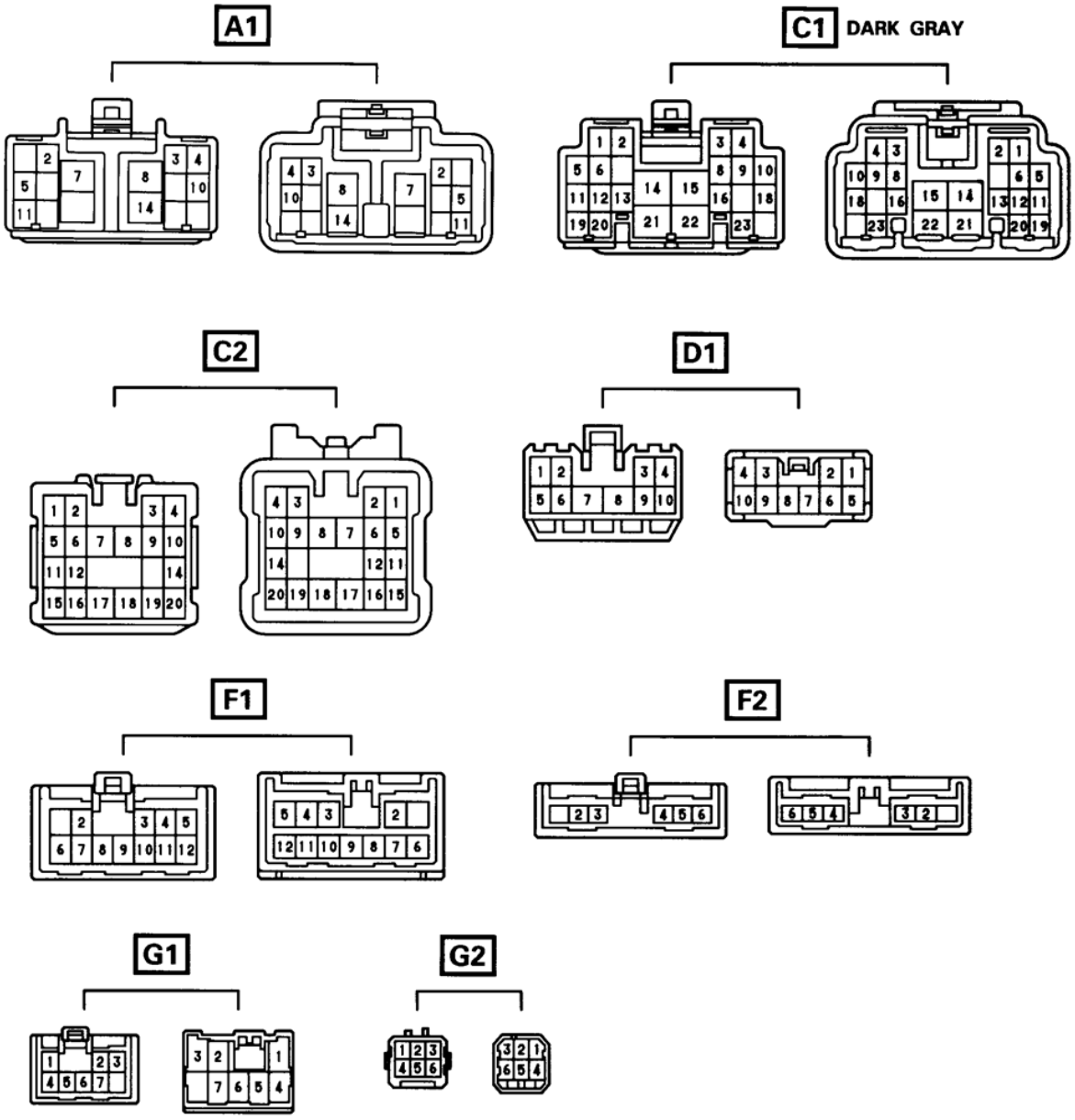

ELECTRICAL WIRING ROUTING

▭ : Location of Connector Joining Wire Harness and Wire Harness

▽ : Location of Ground Points

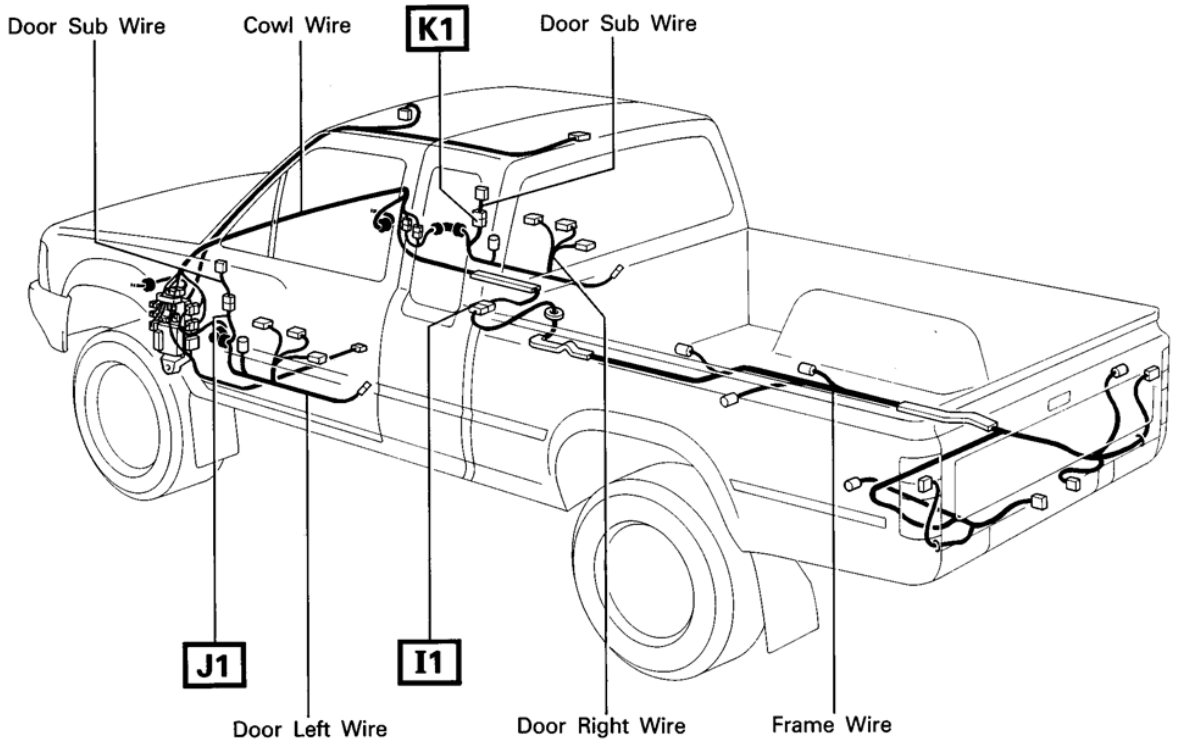

⬡ : Location of Splice Points

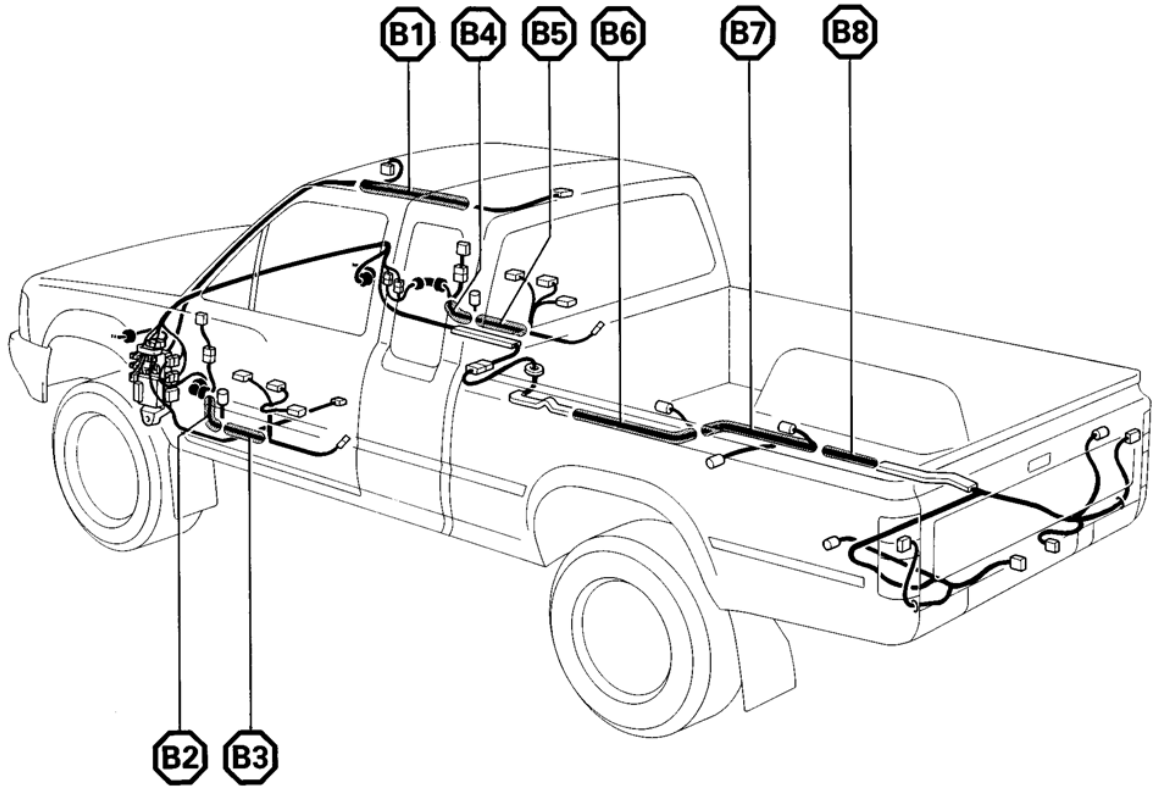

Connector Joining Wire Harness and Wire Harness

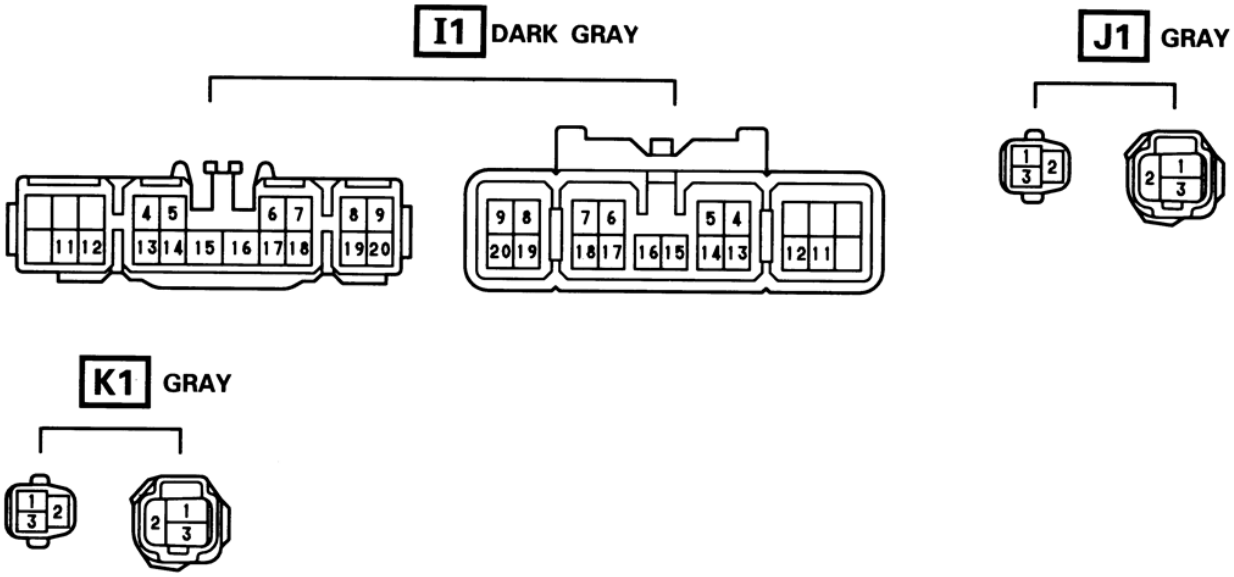

RELAY LOCATIONS

[Engine Compartment]

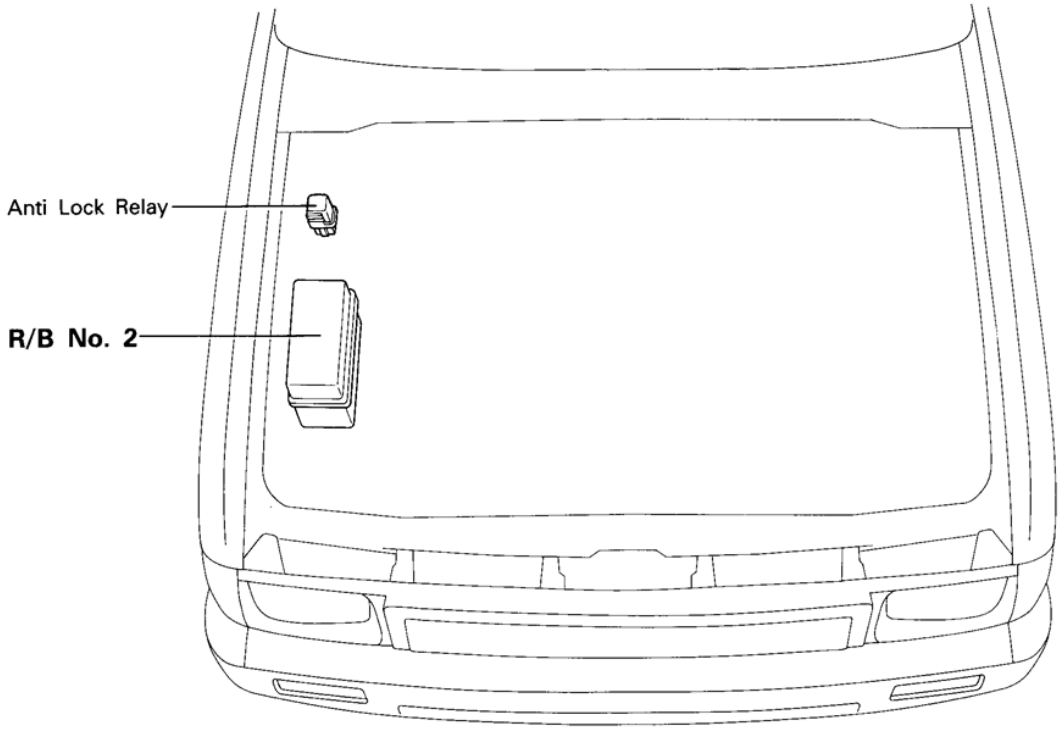

[Instrument Panel]

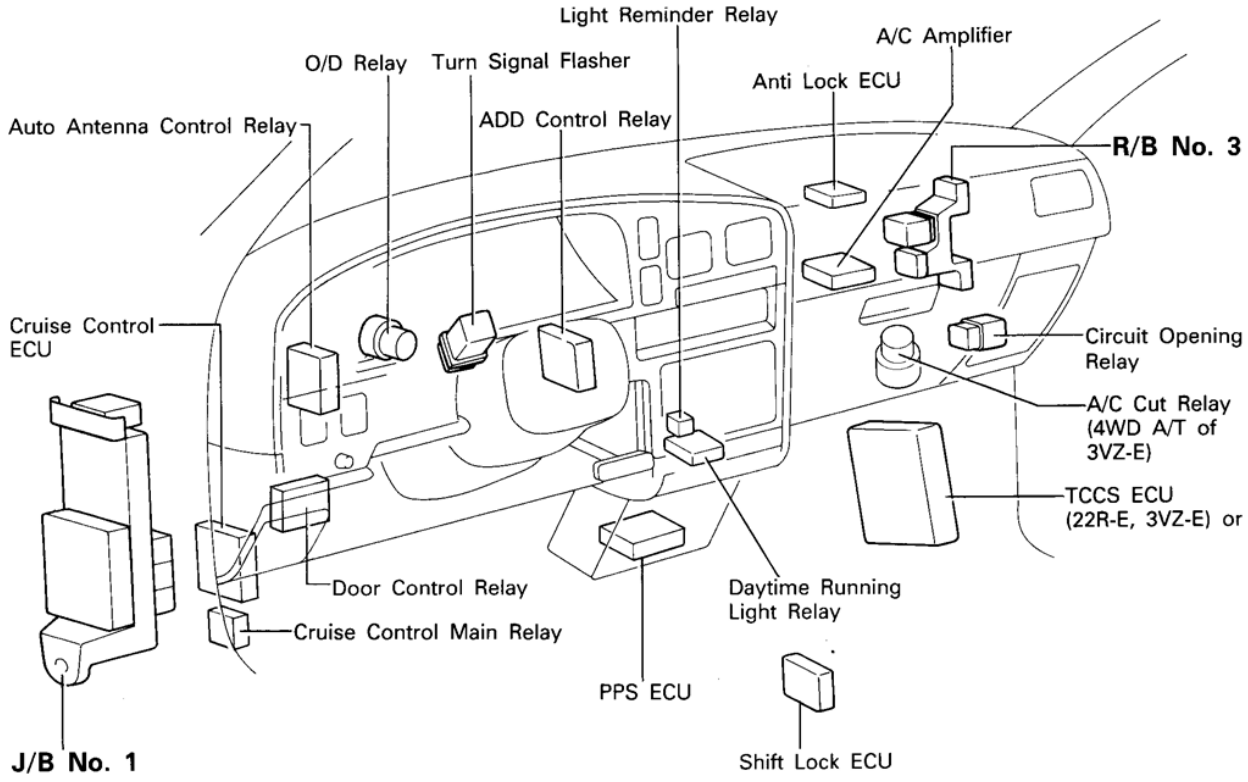

② : R/B No. 2	Engine Compartment Right

[for USA]

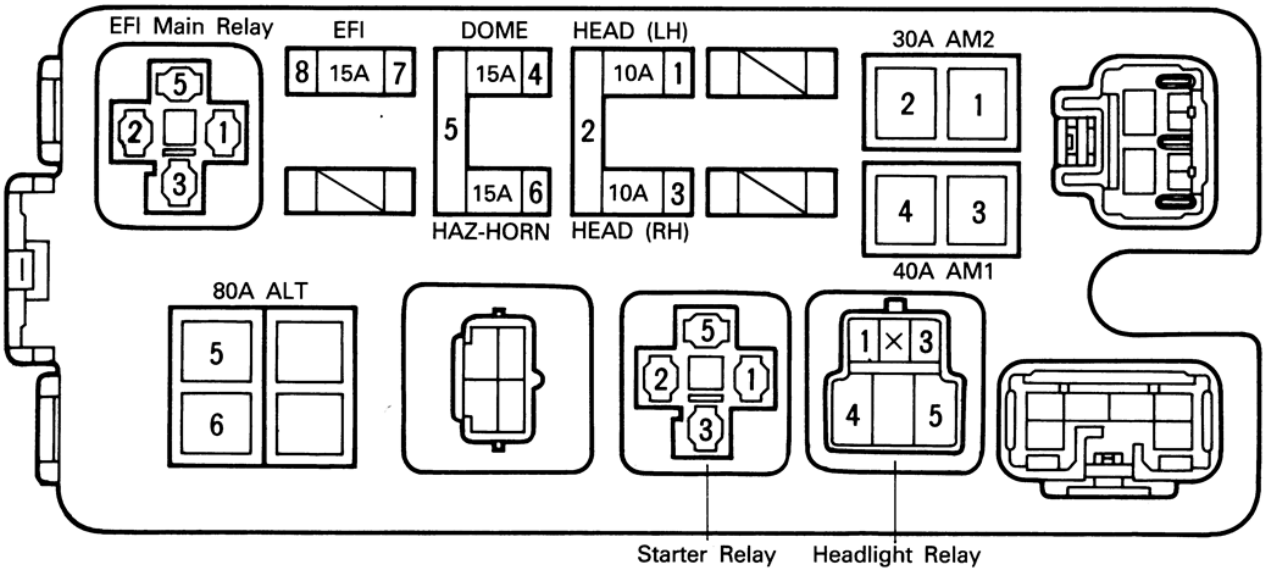

[for CANADA]

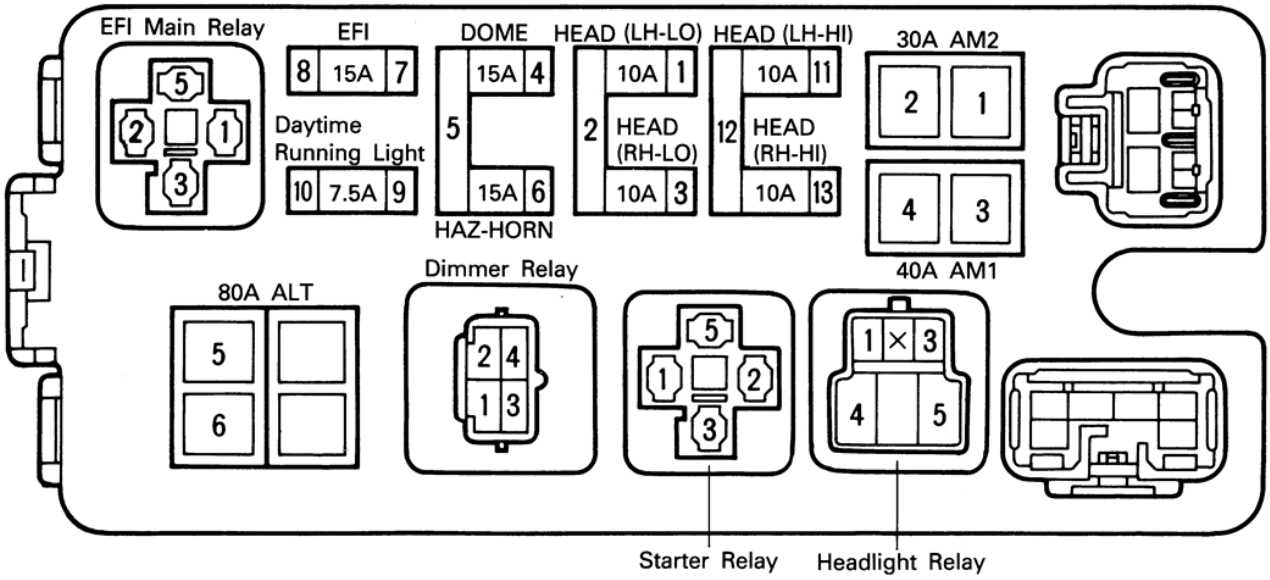

RELAY LOCATIONS

: J/B No. 1	Left Kick Panel

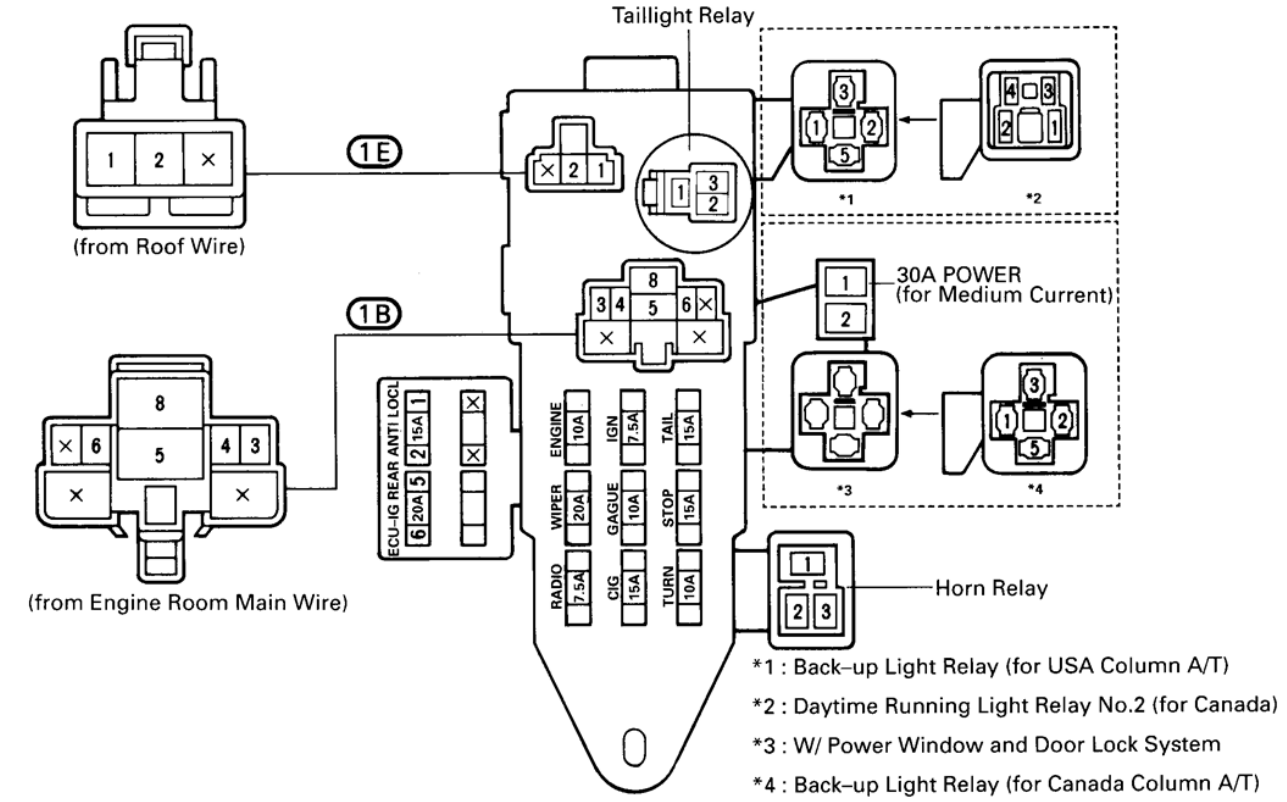

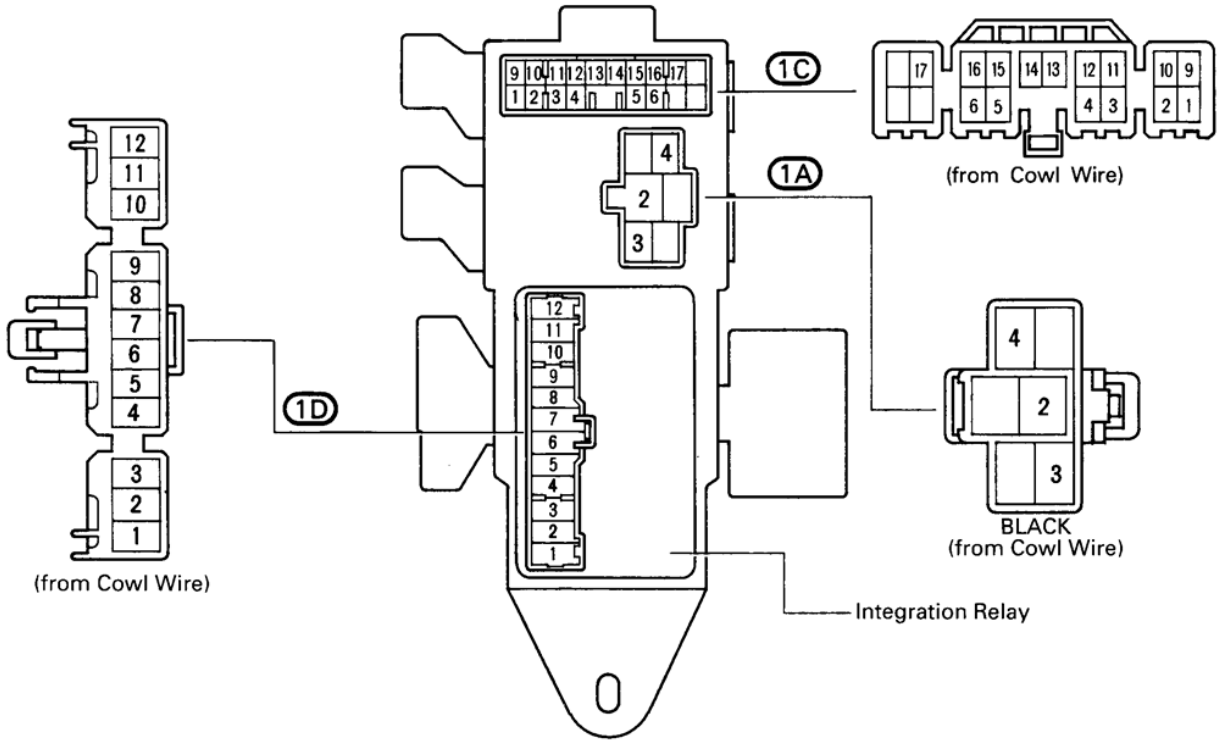

[J/B No. 1 Inner Circuit]

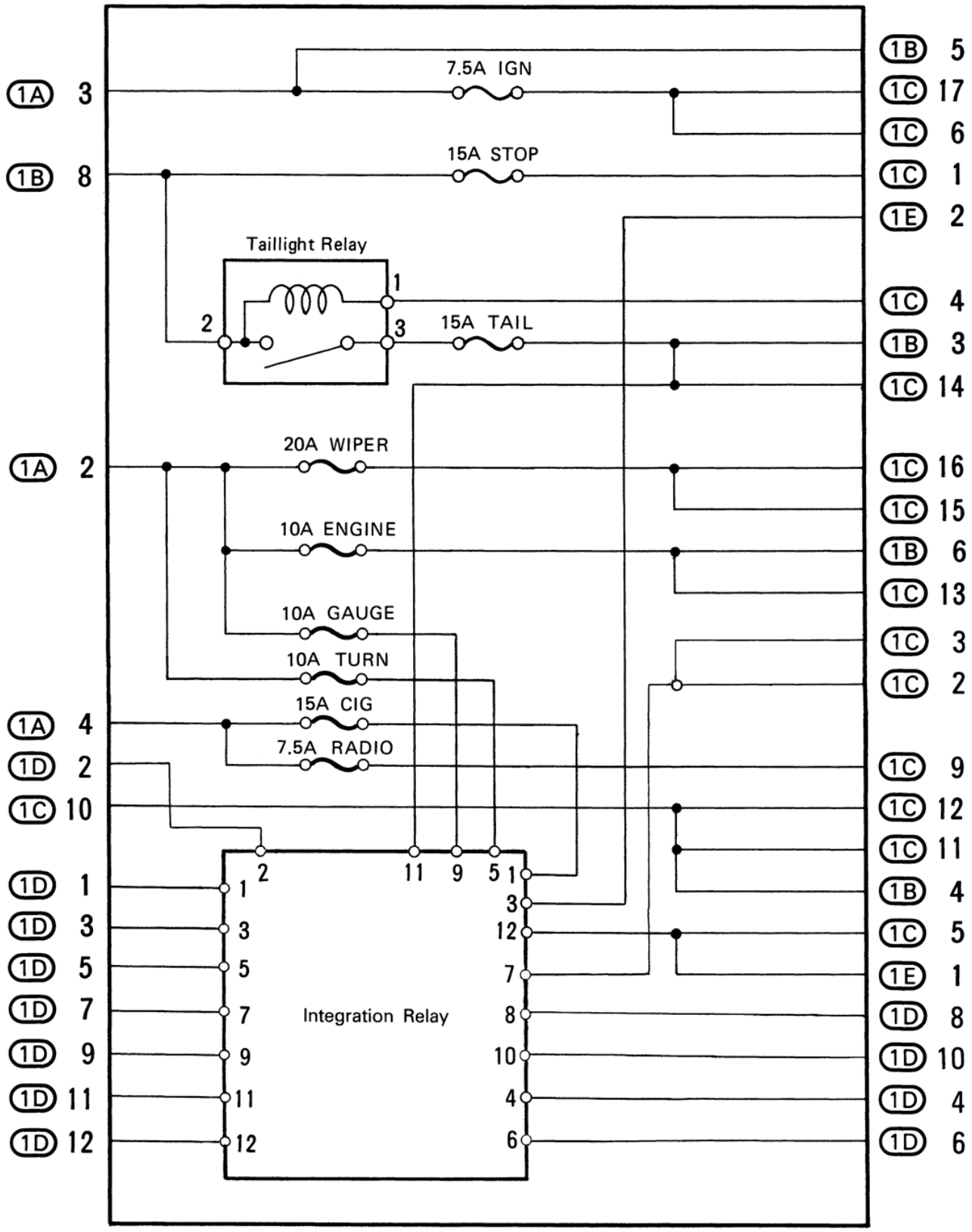

RELAY LOCATIONS
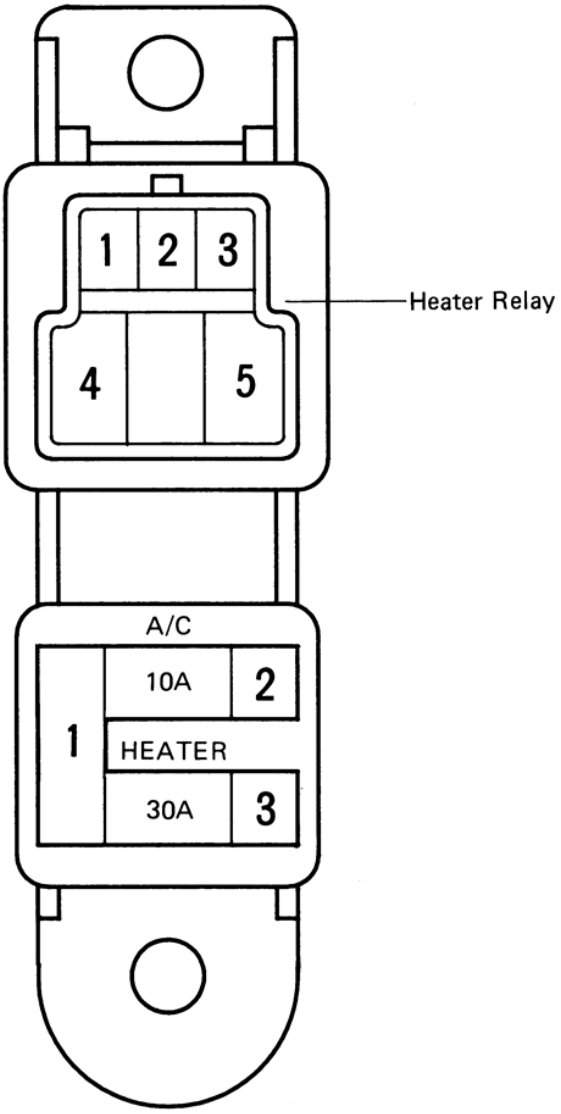
③ : R/B No. 3	Glove Box Right